INVITATION TO BID

STATE OF LOUISIANA

DIVISION OF ADMINISTRATION

OFFICE OF STATE PURCHASING

BIDS WILL BE PUBLICLY OPENED:

APR 20, 2006 10:00 AM

PURCHASING AGENCY NO. : 107001

=====> VENDOR NO. :
SOLICITATION : 2206612
FILE NO. : M31105S
OPENING DATE : 04/20/06

=====> VENDOR NAME AND ADDRESS

FILL IN VENDOR NUMBER (FEIN), NAME AND ADDRESS ABOVE, BEFORE SUBMITTING BID.

SEE NO. 8 BELOW. RETURN BID TO

2206612	04/20/06	10:00 AM M31105S

OFFICE OF STATE PURCHASING
OFFICE OF STATE PURCHASING
POST OFFICE BOX 94095
BATON ROUGE, LA 70804-9095

BUYER	: JOHN COLLINS, CPPB
BUYER PHONE	: (225) 342-8031
DATE ISSUED	: 03/29/06
REQ. AGENCY	: 112PUR
DEPT OF MILITARY AFFAIRS	
AGENCY REQ. NO.	:
ISIS REQ. NO.	: 1287390
VENDOR PHONE	:
FISCAL YEAR	: 06
CLASS/SUBCLASS	: 16547
SCHEDULED BEGIN DATE	: 00/00/00
SCHEDULED END DATE	: 00/00/00
T-NUMBER	:

FOLD HERE-->

SERVING LINE FOR GILLIS LONG CAFETERIA

TO BE COMPLETED BY VENDOR

1._____ PLEASE REMOVE FROM THIS COMMODITY CODE.
2._____ DELIVERY WILL BE MADE IN THIS NUMBER OF DAYS AFTER RECEIPT OF ORDER.
3._____ % CASH DISCOUNT FOR PROMPT PAYMENT IF MADE WITHIN THIRTY (30) DAYS. CASH DISCOUNTS FOR LESS THAN 30 DAYS OR LESS THAN 1% WILL BE ACCEPTED, BUT WILL NOT BE CONSIDERED IN DETERMINING AWARDS. ON INDEFINITE QUANTITY TERM CONTRACTS, CASH DISCOUNTS WILL BE ACCEPTED AND TAKEN BUT WILL NOT BE CONSIDERED IN DETERMINING AWARDS.
4._____ BID BOND ATTACHED,_____ CERTIFIED CHECK ATTACHED, _____ OTHER, IF REQUIRED.
5._____ BID REFERENCE NUMBER. (THIS NUMBER WILL APPEAR ON RESULTING ORDER OR CONTRACT).

INSTRUCTIONS TO BIDDERS

1. READ THE ENTIRE BID, INCLUDING ALL TERMS AND CONDITIONS AND SPECIFICATIONS.
2. ALL BID PRICES MUST BE TYPED OR WRITTEN IN INK. ANY CORRECTIONS, ERASURES OR OTHER FORMS OF ALTERATION TO UNIT PRICES SHOULD BE INITIALED BY THE BIDDER.
3. THIS BID IS TO BE MANUALLY SIGNED IN INK.
4. BID PRICES SHALL INCLUDE DELIVERY OF ALL ITEMS F.O.B. DESTINATION OR AS OTHERWISE PROVIDED. BIDS CONTAINING "PAYMENT IN ADVANCE" OR "C.O.D" REQUIREMENTS MAY BE REJECTED. PAYMENT IS TO BE MADE WITHIN 30 DAYS AFTER RECEIPT OF PROPERLY EXECUTED INVOICE OR DELIVERY, WHICHEVER IS LATER.
5. AMOUNT OF BID BOND REQUIRED: _____N/A_____.
6. AMOUNT OF PERFORMANCE BOND, IF REQUIRED. _____ OR _____0%_____ OF BID.
7. DESIRED DELIVERY: _____060DAYS ARO_____
8. TO ASSURE CONSIDERATION OF YOUR BID, ALL BIDS AND ADDENDA SHOULD BE RETURNED IN AN ENVELOPE OR PACKAGE CLEARLY MARKED WITH THE BID OPENING DATE AND THE BID NUMBER, OR SUBMITTED IN THE SPECIAL ENVELOPE IF FURNISHED FOR THAT PURPOSE.
9. BIDS SUBMITTED ARE SUBJECT TO PROVISIONS OF THE LAWS OF THE STATE OF LOUISIANA INCLUDING BUT NOT LIMITED TO L.R.S. 39:1551-1736; PURCHASING RULES AND REGULATIONS; EXECUTIVE ORDERS; STANDARD TERMS AND CONDITIONS; SPECIAL CONDITIONS; AND SPECIFICATIONS LISTED IN THIS SOLICITATION.
10. IMPORTANT: BY SIGNING THE BID, THE BIDDER CERTIFIES COMPLIANCE WITH ALL INSTRUCTIONS TO BIDDERS, TERMS, CONDITIONS AND SPECIFICATIONS, AND FURTHER CERTIFIES THAT THIS BID IS MADE WITHOUT COLLUSION OR FRAUD. THIS BID IS TO BE MANUALLY SIGNED IN INK BY A PERSON AUTHORIZED TO BIND THE VENDOR (SEE NO.30). ALL BID INFORMATION SHALL BE MADE WITH INK OR TYPEWRITTEN.

FOLD HERE-->

VENDOR PHONE NUMBER: FAX NUMBER:	TITLE	DATE

SIGNATURE OF AUTHORIZED BIDDER - SEE NO. 30, PAGE 3. (MUST BE SIGNED)	NAME OF BIDDER (TYPED OR PRINTED)

11 ADDRESS ALL INQUIRIES AND CORRESPONDENCE TO THE BUYER AT THE PHONE AND ADDRESS SHOWN ABOVE.

_____ 12. CONFERENCE:
NA
_____ NA
NA

13. BID FORMS.
ALL WRITTEN BIDS, UNLESS OTHERWISE PROVIDED FOR, MUST BE SUBMITTED ON, AND IN ACCORDANCE WITH, FORMS PROVIDED, PROPERLY SIGNED (SEE NO. 30). BIDS SUBMITTED IN THE FOLLOWING MANNER WILL NOT BE ACCEPTED:

A. BID CONTAINS NO SIGNATURE INDICATING INTENT TO BE BOUND;
B. BID FILLED OUT IN PENCIL; AND
C. BID NOT SUBMITTED ON THE STATE'S STANDARD FORMS.

BIDS MUST BE RECEIVED AT THE ADDRESS SPECIFIED IN THE SOLICITATION PRIOR TO BID OPENING TIME IN ORDER TO BE CONSIDERED. TELEGRAPHIC AND FAX ALTERATIONS TO BIDS RECEIVED BEFORE BID OPENING TIME WILL BE CONSIDERED PROVIDED FORMAL BID AND WRITTEN ALTERATION HAVE BEEN RECEIVED AND TIME-STAMPED BEFORE BID OPENING TIME. ENTIRE BID SHOULD BE RETURNED, EXCEPT ITEM PAGES NOT BID.

14. STANDARDS OF QUALITY.
ANY PRODUCT OR SERVICE BID SHALL CONFORM TO ALL APPLICABLE FEDERAL AND STATE LAWS AND REGULATIONS AND THE SPECIFICATIONS CONTAINED IN THE SOLICITATION. UNLESS OTHERWISE SPECIFIED IN THE SOLICITATION, ANY MANUFACTURER'S NAME, TRADE NAME, BRAND NAME, OR CATALOG NUMBER USED IN THE SPECIFICATION IS FOR THE PURPOSE OF DESCRIBING THE STANDARD OF QUALITY, PERFOMANCE, AND CHARACTERISTICS DESIRED AND IS NOT INTENDED TO LIMIT OR RESTRICT COMPETITION. BIDDER MUST SPECIFY THE BRAND AND MODEL NUMBER OF THE PRODUCT OFFERED IN HIS BID. BIDS NOT SPECIFYING BRAND AND MODEL NUMBER SHALL BE CONSIDERED AS OFFERING THE EXACT PRODUCTS SPECIFIED IN THE SOLICITATION.

15. DESCRIPTIVE INFORMATION.
BIDDERS PROPOSING AN EQUIVALENT BRAND OR MODEL SHOULD SUBMIT WITH THE BID INFORMATION (SUCH AS ILLUSTRATIONS, DESCRIPTIVE LITERATURE, TECHNICAL DATA) SUFFICIENT FOR STATE OF LOUISIANA TO EVALUATE QUALITY, SUITABILITY, AND COMPLIANCE WITH THE SPECIFICATIONS IN THE SOLICITATION. FAILURE TO SUBMIT DESCRIPTIVE INFORMATION MAY CAUSE BID TO BE REJECTED. ANY CHANGE MADE TO A MANUFACTURER'S PUBLISHED SPECIFICATIONS SUBMITTED FOR A PRODUCT SHALL BE VERIFIABLE BY THE MANUFACTURER. IF ITEM(S) BID DO NOT FULLY COMPLY WITH SPECIFICATIONS (INCLUDING BRAND AND/OR PRODUCT NUMBER), BIDDER MUST STATE IN WHAT RESPECT ITEM(S) DEVIATE. FAILURE TO NOTE EXCEPTIONS ON THE BID FORM WILL NOT RELIEVE THE SUCCESSFUL BIDDER(S) FROM SUPPLYING THE ACTUAL PRODUCTS REQUESTED.

16. BID OPENING.
BIDDERS MAY ATTEND THE BID OPENING, BUT NO INFORMATION OR OPINIONS CONCERNING THE ULTIMATE CONTRACT AWARD WILL BE GIVEN AT THE BID OPENING OR DURING THE EVALUATION PROCESS. BIDS MAY BE EXAMINED WITHIN 72 HOURS AFTER BID OPENING. INFORMATION PERTAINING TO COMPLETED FILES MAY BE SECURED BY VISITING THE STATE OF LOUISIANA DURING NORMAL WORKING HOURS. WRITTEN BID TABULATIONS WILL NOT BE FURNISHED.

17. AWARDS.
THE STATE OF LOUISIANA RESERVES THE RIGHT TO AWARD ITEMS SEPARATELY, GROUPED OR ON AN ALL-OR-NONE BASIS AND TO REJECT ANY OR ALL BIDS AND WAIVE ANY INFORMALITIES.

18. PRICES .
UNLESS OTHERWISE SPECIFIED BY THE STATE OF LOUISIANA IN THE SOLICITATION, BID PRICES MUST BE COMPLETE, INCLUDING TRANSPORTATION PREPAID BY BIDDER TO DESTINATION AND FIRM FOR ACCEPTANCE FOR A MINIMUM OF 30 DAYS. IF ACCEPTED, PRICES MUST BE FIRM FOR THE CONTRACTUAL PERIOD. BIDS OTHER THAN F.O.B. DESTINATION MAY BE REJECTED. PRICES SHOULD BE QUOTED IN THE UNIT (EACH, BOX, CASE, ETC.) AS SPECIFIED IN THE SOLICITATION.

19. DELIVERIES.
BIDS MAY BE REJECTED IF THE DELIVERY TIME INDICATED IS LONGER THAN THAT SPECIFIED IN THE SOLICITATION.

20. TAXES.
VENDOR IS RESPONSIBLE FOR INCLUDING ALL APPLICABLE TAXES IN THE BID PRICE. STATE AGENCIES ARE EXEMPT FROM ALL STATE AND LOCAL SALES AND USE TAXES.

21. NEW PRODUCTS.
UNLESS SPECIFICALLY CALLED FOR IN THE SOLICITATION, ALL PRODUCTS FOR PURCHASE MUST BE NEW, NEVER PREVIOUSLY USED, AND THE CURRENT MODEL AND/OR PACKAGING. NO REMANUFACTURED, DEMONSTRATOR, USED OR IRREGULAR PRODUCT WILL BE CONSIDERED FOR PURCHASE UNLESS OTHERWISE SPECIFIED IN THE SOLICITATION. THE MANUFACTURER'S STANDARD WARRANTY WILL APPLY UNLESS OTHERWISE SPECIFIED IN THE SOLICITATION.

22. CONTRACT RENEWALS.
UPON AGREEMENT OF THE STATE OF LOUISIANA AGENCY AND THE CONTRACTOR, A TERM CONTRACT MAY BE EXTENDED FOR 2 ADDITIONAL 12-MONTH PERIODS AT THE SAME PRICES, TERMS AND CONDITIONS. IN SUCH CASES, THE TOTAL CONTRACT TERM CANNOT EXCEED 36 MONTHS.

23. CONTRACT CANCELLATION.
THE STATE OF LOUISIANA HAS THE RIGHT TO CANCEL ANY CONTRACT, IN ACCORDANCE WITH PURCHASING RULES AND REGULATIONS, FOR CAUSE, INCLUDING BUT NOT LIMITED TO, THE FOLLOWING: (1) FAILURE TO DELIVER WITHIN THE TIME SPECIFIED IN THE CONTRACT; (2) FAILURE OF THE PRODUCT OR SERVICE TO MEET SPECIFICATIONS, CONFORM TO SAMPLE QUALITY OR TO BE DELIVERED IN GOOD CONDITION; (3) MISREPRESENTATION BY THE CONTRACTOR; (4) FRAUD, COLLUSION, CONSPIRACY OR OTHER UNLAWFUL MEANS OF OBTAINING ANY CONTRACT WITH THE STATE; (5) CONFLICT OF CONTRACT PROVISIONS WITH CONSTITUTIONAL OR STATUTORY PROVISIONS OF STATE OR FEDERAL LAW; (6) ANY OTHER BREACH OF CONTRACT.

24. DEFAULT OF CONTRACTOR.
FAILURE TO DELIVER WITHIN THE TIME SPECIFIED IN THE BID WILL CONSTITUTE A DEFAULT AND MAY CAUSE CANCELLATION OF THE CONTRACT. WHERE THE STATE HAS DETERMINED THE CONTRACTOR TO BE IN DEFAULT, THE STATE RESERVES THE RIGHT TO PURCHASE ANY OR ALL PRODUCTS OR SERVICES COVERED BY THE CONTRACT ON THE OPEN MARKET AND TO CHARGE THE CONTRACTOR WITH COST IN EXCESS OF THE CONTRACT PRICE. UNTIL SUCH ASSESSED CHARGES HAVE BEEN PAID, NO SUBSEQUENT BID FROM THE DEFAULTING CONTRACTOR WILL BE CONSIDERED.

25. ORDER OF PRIORITY.
IN THE EVENT THERE IS A CONFLICT BETWEEN THE INSTRUCTIONS TO BIDDERS OR STANDARD CONDITIONS AND THE SPECIAL CONDITIONS, THE SPECIAL CONDITIONS SHALL GOVERN.

26. APPLICABLE LAW.
ALL CONTRACTS SHALL BE CONSTRUED IN ACCORDANCE WITH AND GOVERNED BY THE LAWS OF THE STATE OF LOUISIANA.

27. COMPLIANCE WITH CIVIL RIGHTS LAWS.
BY SUBMITTING AND SIGNING THIS BID, BIDDER AGREES TO ABIDE BY THE REQUIREMENTS OF THE FOLLOWING AS APPLICABLE: TITLE VI AND VII OF THE CIVIL RIGHTS ACT OF 1964, AS AMENDED BY THE EQUAL OPPORTUNITY ACT OF 1972, FEDERAL EXECUTIVE ORDER 11246, FEDERAL REHABILITATION ACT OF 1973, AS AMENDED, THE VETERAN'S READJUSTMENT ASSISTANCE ACT OF 1974, TITLE IX OF THE EDUCATION AMENDMENTS OF 1972, THE AGE ACT OF 1975, AND BIDDER AGREES TO ABIDE BY THE REQUIREMENTS OF THE AMERICANS WITH DISABILITIES ACT OF 1990. BIDDER AGREES NOT TO DISCRIMINATE IN ITS EMPLOYMENT PRACTICES, AND WILL RENDER SERVICES UNDER ANY CONTRACT ENTERED INTO AS A RESULT OF THIS SOLICITATION WITHOUT REGARD TO RACE, COLOR, RELIGION, SEXUAL ORIENTATION, NATIONAL ORIGIN, VETERAN STATUS, POLITICAL AFFILIATION, OR DISABILITIES. ANY ACT OF DISCRIMINATION COMMITTED BY BIDDER, OR FAILURE TO COMPLY WITH THESE STATUTORY OBLIGATIONS WHEN APPLICABLE, SHALL BE GROUNDS FOR TERMINATION OF ANY CONTRACT ENTERED INTO AS A RESULT OF THIS SOLICITATION.

28. SPECIAL ACCOMMODATION.
ANY "QUALIFIED INDIVIDUAL WITH A DISABILITY" AS DEFINED BY THE AMERICANS WITH DISABILITIES ACT WHO HAS SUBMITTED A BID AND DESIRES TO ATTEND THE BID OPENING, MUST NOTIFY THIS OFFICE IN WRITING NOT LATER THAN SEVEN DAYS PRIOR TO THE BID OPENING DATE OF THEIR NEED FOR SPECIAL ACCOMMODATIONS. IF THE REQUEST CANNOT BE REASONABLY PROVIDED, THE INDIVIDUAL WILL BE INFORMED PRIOR TO THE BID OPENING.

29. INDEMNITY.
CONTRACTOR AGREES, UPON RECEIPT OF WRITTEN NOTICE OF A CLAIM OR ACTION, TO DEFEND THE CLAIM OR ACTION, OR TAKE OTHER APPROPRIATE MEASURE, TO INDEMNIFY, AND HOLD HARMLESS, THE STATE, ITS OFFICERS, ITS AGENTS AND ITS EMPLOYEES FROM AND AGAINST ALL CLAIMS AND ACTIONS FOR BODILY INJURY, DEATH OR PROPERTY DAMAGES CAUSED BY THE FAULT OF THE CONTRACTOR, ITS OFFICERS, ITS AGENTS, OR ITS EMPLOYEES. CONTRACTOR IS OBLIGATED TO INDEMNIFY ONLY TO THE EXTENT OF THE FAULT OF THE CONTRACTOR, ITS OFFICERS, ITS AGENTS, OR ITS EMPLOYEES. HOWEVER, THE CONTRACTOR SHALL HAVE NO OBLIGATION AS SET FORTH ABOVE WITH RESPECT TO ANY CLAIM OR ACTION FROM BODILY INJURY, DEATH OR PROPERTY DAMAGES ARISING OUT OF THE FAULT OF THE STATE, ITS OFFICERS, ITS AGENTS OR ITS EMPLOYEES.

30. SIGNATURE AUTHORITY.
IN ACCORDANCE WITH L.R.S. 39:1594 (ACT 121), THE PERSON SIGNING THE BID MUST BE:
1. A CURRENT CORPORATE OFFICER, PARTNERSHIP MEMBER OR OTHER INDIVIDUAL SPECIFICALLY AUTHORIZED TO SUBMIT A BID AS REFLECTED IN THE APPROPRIATE RECORDS ON FILE WITH THE SECRETARY OF STATE; OR
2. AN INDIVIDUAL AUTHORIZED TO BIND THE VENDOR AS REFLECTED BY A CORPORATE RESOLUTION, CERTIFICATE OR AFFIDAVIT; OR
3. OTHER DOCUMENTS INDICATING AUTHORITY WHICH ARE ACCEPTABLE TO THE PUBLIC ENTITY.

1 BID DELIVERY INSTRUCTIONS FOR STATE PURCHASING:

BIDDERS ARE HEREBY ADVISED THAT THE U.S. POSTAL SERVICE DOES NOT MAKE DELIVERIES TO OUR PHYSICAL LOCATION.

BIDS MAY BE MAILED THROUGH THE U.S. POSTAL SERVICE TO OUR BOX AT:
OFFICE OF STATE PURCHASING
P O BOX 94095
BATON ROUGE LA 70804-9095

BIDS MAY BE DELIVERED BY HAND OR COURIER SERVICE TO OUR PHYSICAL LOCATION AS FOLLOWS:

OFFICE OF STATE PURCHASING
CLAIBORNE BUILDING, SUITE 2-160
1201 NORTH THIRD STREET
BATON ROUGE, LA 70802

BIDDER IS SOLELY RESPONSIBLE FOR ENSURING THAT ITS COURIER SERVICE PROVIDER MAKES INSIDE DELIVERIES TO OUR PHYSICAL LOCATION. THE OFFICE OF STATE PURCHASING IS NOT RESPONSIBLE FOR ANY DELAYS CAUSED BY THE BIDDER'S CHOSEN MEANS OF BID DELIVERY.

BIDDER IS SOLELY RESPONSIBLE FOR THE TIMELY DELIVERY OF ITS BID. FAILURE TO MEET THE BID OPENING DATE & TIME SHALL RESULT IN REJECTION OF THE BID.

****
PUBLICIZING AWARDS. IN ACCORDANCE WITH L.A.C.34:I.535, UNSUCCESSFUL BIDDERS WILL BE NOTIFIED OF THE AWARD PROVIDED THAT THEY SUBMIT WITH THEIR BID A SELF-ADDRESSED STAMPED ENVELOPE REQUESTING THIS INFORMATION.
****

ATTENTION:

RECEIPT OF A SOLICITATION OR AWARD CANNOT BE RELIED UPON AS AN ASSURANCE OF RECEIVING FUTURE SOLICITATIONS. IN ORDER TO RECEIVE FUTURE SOLICITATIONS/AWARDS FROM THIS OFFICE, YOU MUST ENROLL IN THE PROPER CATEGORY ON LAPAC OR ON STATE PURCHASING'S AGPS BIDDERS LIST. ENROLLMENT IN LAPAC IS FREE AND PROVIDES EMAIL NOTIFICATION OF BID OPPORTUNITIES BASED UPON COMMODITIES THAT YOU SELECT.

2 TERMS AND CONDITIONS. THIS SOLICITATION CONTAINS ALL TERMS AND CONDITIONS WITH RESPECT TO THE COMMODITIES HEREIN. ANY VENDOR CONTRACTS, FORMS, TERMS OR OTHER MATERIALS SUBMITTED WITH BID MAY CAUSE BID TO BE REJECTED.

3 COMPLIANCE WITH CIVIL RIGHTS LAWS. BY SUBMITTING AND SIGNING THIS SOLICITATION, THE BIDDER AGREES TO ABIDE BY THE REQUIREMENTS OF THE FOLLOWING AS APPLICABLE: TITLE VI AND TITLE VII OF THE CIVIL RIGHTS ACT OF 1964, AS AMENDED BY THE EQUAL OPPORTUNITY ACT OF 1972, FEDERAL EXECUTIVE ORDER 11246, THE FEDERAL REHABILITATION ACT OF 1973, AS

AMENDED, THE VIETNAM ERA VETERAN'S READJUSTMENT ASSISTANCE ACT OF 1974, TITLE IX OF THE EDUCATION AMENDMENTS OF 1972, THE AGE ACT OF 1975, AND BIDDER AGREES TO ABIDE BY THE REQUIREMENTS OF THE AMERICANS WITH DISABILITIES ACT OF 1990. BIDDER AGREES NOT TO DISCRIMINATE IN ITS EMPLOYMENT PRACTICES, AND WILL RENDER SERVICES UNDER ANY CONTRACT ENTERED INTO AS A RESULT OF THIS SOLICITATION, WITHOUT REGARD TO RACE, COLOR, RELIGION, SEX, SEXUAL ORIENTATION, NATIONAL ORIGIN, VETERAN STATUS, POLITICAL AFFILIATION, OR DISABILITIES. ANY ACT OF DISCRIMINATION COMMITTED BY BIDDER, OR FAILURE TO COMPLY WITH THESE STATUTORY OBLIGATIONS WHEN APPLICABLE, SHALL BE GROUNDS FOR TERMINATION OF ANY CONTRACT ENTERED INTO AS A RESULT OF THIS SOLICITATION.

4 PREFERENCE. IN ACCORDANCE WITH LOUISIANA REVISED STATUTES 39:1595, A PREFERENCE MAY BE ALLOWED FOR PRODUCTS MANUFACTURED, PRODUCED, GROWN, OR ASSEMBLED IN LOUISIANA OF EQUAL QUALITY.

DO YOU CLAIM THIS PREFERENCE? YES_____

SPECIFY LINE NUMBER(S):_____

_____

SPECIFY LOCATION WITHIN LOUISIANA WHERE THIS PRODUCT IS MANUFACTURED, PRODUCED, GROWN OR ASSEMBLED:_____

_____

(NOTE: IF MORE SPACE IS REQUIRED, INCLUDE ON SEPARATE SHEET.)

DO YOU HAVE A LOUISIANA BUSINESS WORKFORCE? YES_____ NO_____

IF SO, DO YOU CERTIFY THAT AT LEAST FIFTY PERCENT (50%) OF YOUR LOUISIANA BUSINESS WORKFORCE IS COMPRISED OF LOUISIANA RESIDENTS?

YES_____ NO_____

FAILURE TO SPECIFY ABOVE INFORMATION MAY CAUSE ELIMINATION FROM PREFERENCES. PREFERENCES SHALL NOT APPLY TO SERVICE CONTRACTS.

5 IF BIDDING OTHER THAN SPECIFIED, SUFFICIENT INFORMATION SHOULD BE ENCLOSED WITH THE BID IN ORDER TO DETERMINE QUALITY, SUITABILITY, AND COMPLIANCE WITH THE SPECIFICATIONS.

FAILURE TO COMPLY WITH THIS REQUEST MAY ELIMINATE YOUR BID FROM CONSIDERATION.

6 AWARD TO BE MADE ON AN ALL-OR-NONE BASIS.

PRICE SHEET	INVITATION TO BID
NUMBER : 2206612 OPEN DATE : 04/20/06 TIME: 10:00 AM T-NUMBER :	BIDDER:

LINE NO.	COMMODITY/SERVICE DESCRIPTION	QUANTITY FROM/TO	UNIT	UNIT PRICE	EXTENDED TOTAL
	UNLESS SPECIFIED ELSEWHERE SHIP TO: DMA - CARVILLE FACILITY MILITARY DEPARTMENT 5445 POINT CLAIR ROAD BLDG 10 CARVILLE , LA 70721				
00001	COMMODITY CODE: 165-47-000000 ********** ALL THREE LINE WILL BE AWARDED AS ONE GROUP TO ASSURE COMPATABLE UNIT WILL BE PURCHASED. ********** CAFETERIA SERVING LINE,DUKE MANUFACTURED NEXT GEN OR EQUAL SOLID TOP 32 INCH CONSISTING OF THE FOLLOWING: SPECIAL LINE UP STYLE, STAINLESS STEEL TOP DECOR W/STAINLESS STEEL INTERMEDIATE SHELF W/FOUR (4) 6" STAINLESS STEEL LEGS AND FEET, W/SOLID SURFACE. TRAYSLIDE ON WITH A MINIMUM OF 2 FIXED BRACKETS, W/TRAYSLIDE RUNNERS LOCATED ON CUSTOMER SIDE, W/LIGHTS UNDERNEATH TRAYSLIDE; CONCAVE FRONT DECOR PANEL AND A CONCAVE END PANEL SPECIFY BRAND (& NUMBER IF APPLICABLE) _____	1	EACH	_____	_____
00002	COMMODITY CODE: 165-47-000000 DUKE NEXT GEN 46" OR EQUAL HOT FOOD TABLE CONSISTING OF THE FOLLOWING: SPECIAL LINE UP STYLE, STAINLESS STEEL TOP DECOR, BUILT-IN INCLUSION STYLE, THREE (3) 12 INCH X 20 INCH HEAT COMPARTMENTS, FLAT RAIL RECESSED CONTROLS, SEALED WELL AND DRAIN W/COPPER DRAIN FITTINGS, W/DRAINS MANIFOLDED, W/MASTER VALVE, 208 VOLT 1PH 900 WATT W/INF SW, W/FOUR 6" STAINLESS STEEL LEGS AND FEET, W/SOLID SURFACE	1	EACH	_____	_____

LINE NO.	COMMODITY/SERVICE DESCRIPTION	QUANTITY FROM/TO	UNIT	UNIT PRICE	EXTENDED TOTAL
____ ____	TRAYSLIDE ON A MINIMUM OF 3 FIXED BRACKETS, W/TRAYSLIDE RUNNERS LOCATED ON CUSTOMER SIDE, W/LIGHTS UNDER TRAY SLIDE W/ CONCAVE FRONT DECOR PANEL W/46 INCH OVERHEAD ACCESSORY, W/590 3-POSITION BREATHGUARD, W/ADJ. GUARD ON ONE SIDE ONLY, W/SPECIAL POWERCOAT PAINT, W/SINGLE STAINLESS STEEL SHELF, W/120V LIGHTS AND HEATER HARD WIRED TO UNIT. SPECIFY BRAND (& NUMBER IF APPLICABLE) _____				
00003	COMMODITY CODE: 165-47-000000 DUKE NEXT GEN 60" OR EQUAL HOT FOOD TABLE 60 INCHES LONG CONSISTING OF THE FOLLOWING: SPECIAL LINE UP STYLE STAINLESS STEEL TOP DECOR, EXTEND TOP OVER FILLER, BUILT-IN INCLUSION STYLE, FOUR (4) 12 INCH X 20 INCHES HEAT COMPARTMENTS FLAT RAIL-RECESSED CONTROLS SEALED WELLS AND DRAINS W/COPER DRAIN FITTING, W/DRAINS MANIFOLDED, W/MASTER VALVE, 208 VOLTS 1PH/900 WATT W/INF. SW, W/FOUR (4) 6 INCH STAINLESS STEEL LEGS LEGS AND FEET, W/SOLID SURFACE TRAYSLIDE ON A MINIMUM OF 3 FIXED BRACKETS W/TRAY SLIDE RUNNERS LOCATED ON CUSTOMER SIDE, W/LIGHTS UNDER TRAYSLIDE; CONCAVE FRONT DECOR PANEL AND CONCAVE END PANEL. SPECIAL BODY MODIFICATIONS: ***FILLER FOR SPECIAL LENGTH***, W/1 INCH BODY FILLER PANEL, W/60 INCH OVERHEAD ACCESSORY W/590 3-POSITION BREATHGUARD W/ADJUSTMENT GUARD ON ONE SIDE ONLY; SPECIAL POWERCOAT PAINT, W/SINGLE STAINLESS STEEL SHELF, W/120V LIGHTS AND HEATER HARD WIRED TO UNIT. SPECIFY BRAND (& NUMBER IF APPLICABLE) _____	1	EACH	_____	_____

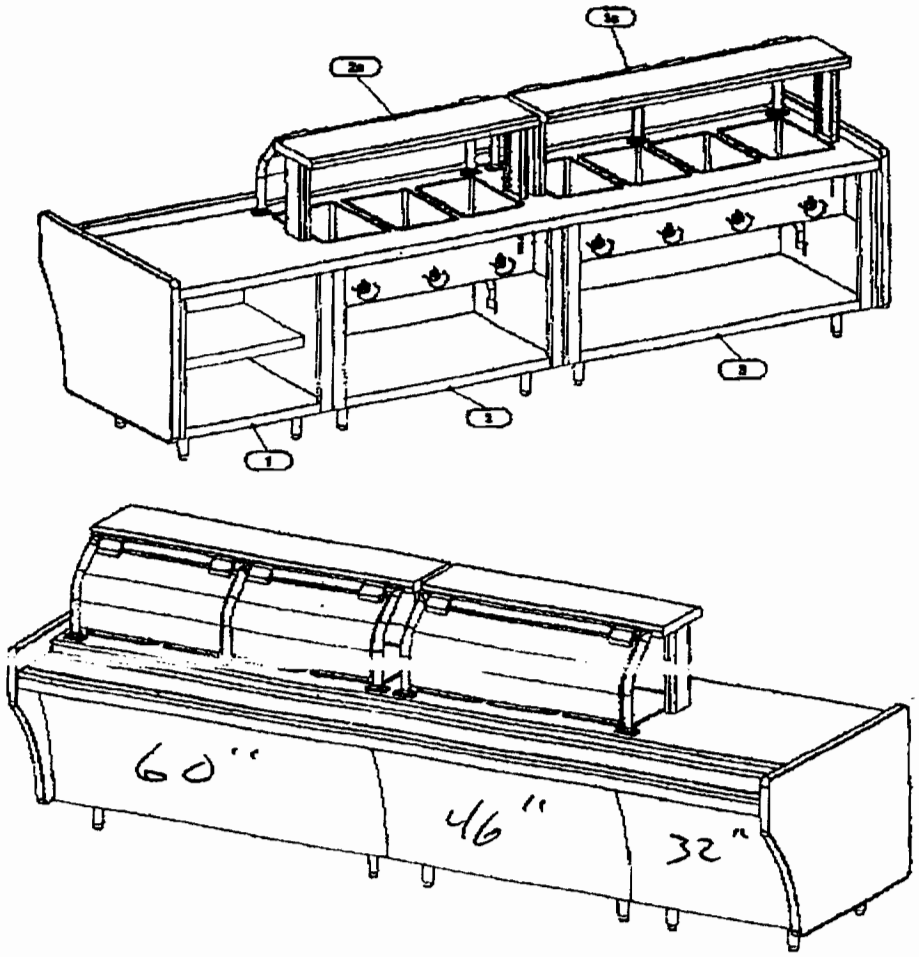

1 3D - PERSPECTIVE
1 NOT TO SCALE